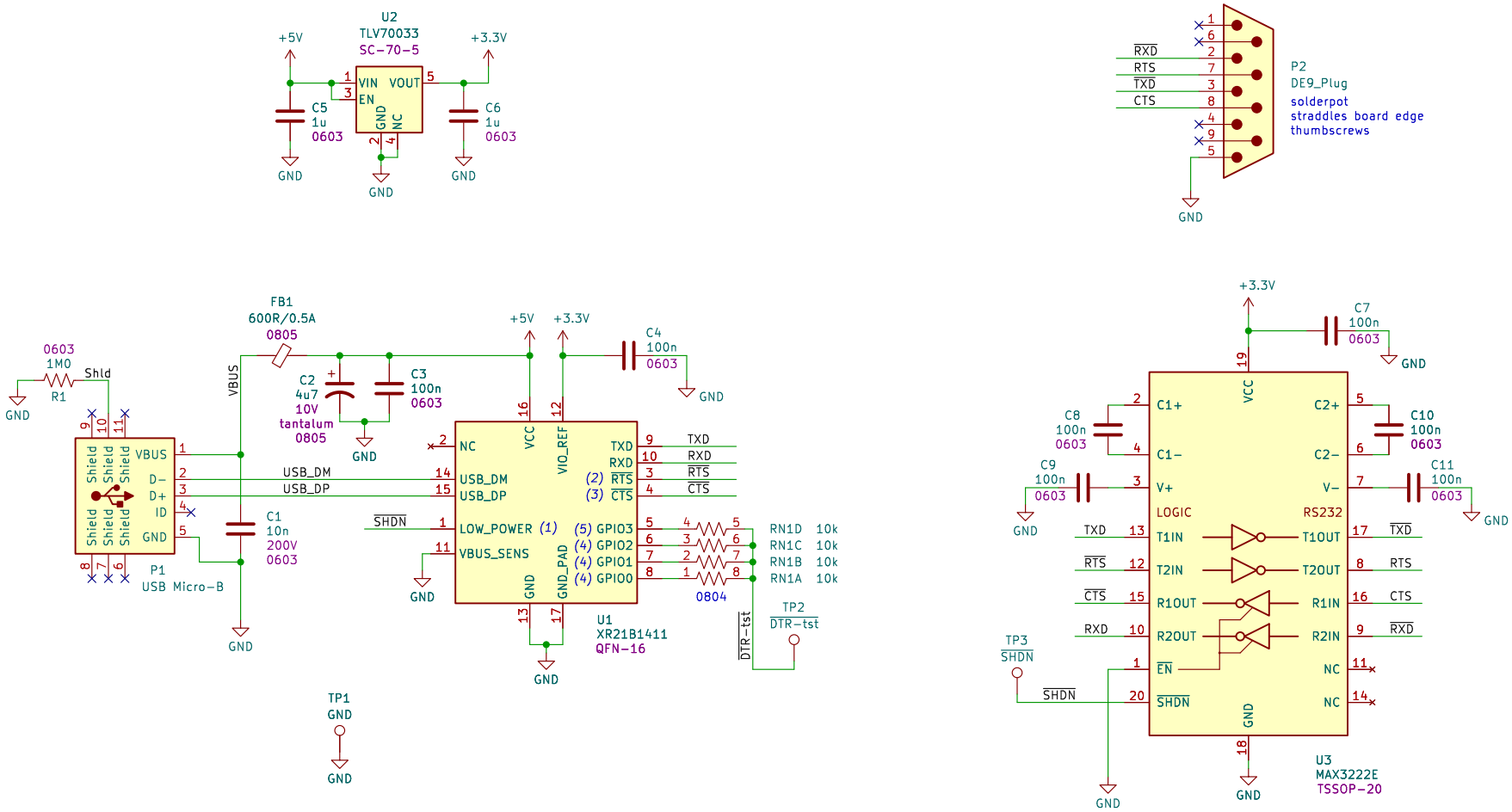

KiKit panel tab annotations

T1

T2

NOTES:

(1) Configured for active low polarity.

(2) Configured as $\overline{RTS}$ with automatic hardware flow control.

(3) Configured as $\overline{CTS}$ with automatic hardware flow control.

(4) Configured as $\overline{DSR}$, $\overline{DCD}$, $\overline{RI}$ inputs.

(5) Configured as $\overline{DTR}$ output.

David C. Wiens

Sheet: /

File: USB−XR21B1411−RS232.kicad_sch

Title: USB−XR21B1411−RS232 (USB−XR−RS232)

Size: USLetter	Date: 2024−Mar−29 15:00 PDT	**Rev: 2.0**
KiCad E.D.A. kicad 7.0.9		Id: 1/1